CAPACITY	SYMBOL/ SERIAL NO.	CIRCUIT DIAGRAM
AC 230V, 50Hz		
18W x 2		

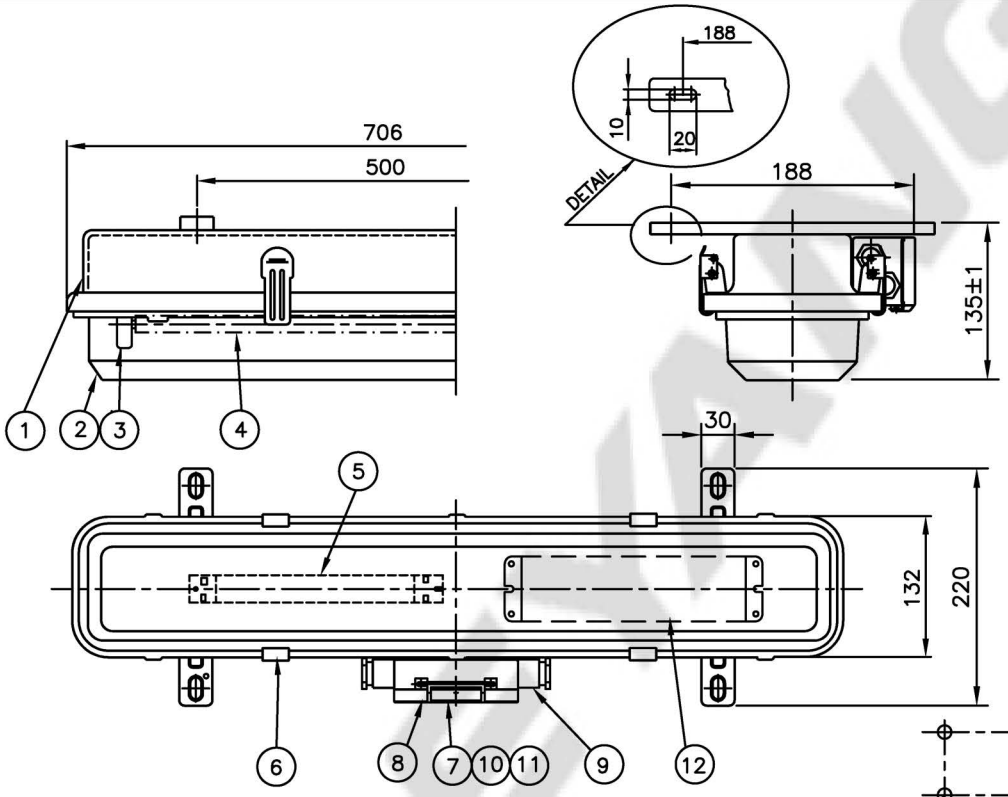

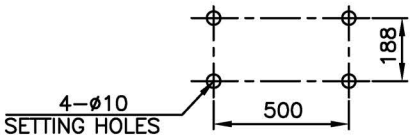

SETTING DIMENSION

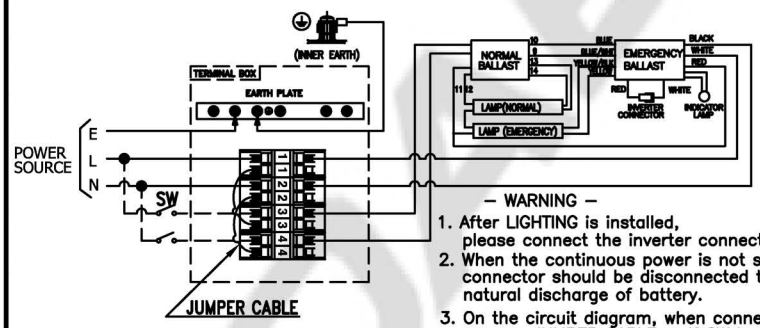

– WARNING –

1. After LIGHTING is installed, please connect the inverter connector.
2. When the continuous power is not supplied, connector should be disconnected to avoid natural discharge of battery.
3. On the circuit diagram, when connecting SW(SWITCH), remove JUMPER CABLE or if SW is not connected, do not remove JUMPER CABLE.

CIRCUIT DIAGRAM

– NOTE –

1. DISCHARGING TIME : 3 hours
2. FULL CHARGING TIME : 24 hours
3. 1–LAMP OPERATION

* INDICATION LAMP COLOR STATUS

NO.	LED (RED)	MODE
1	Steady	Charging / Full charged
2	–	Discharge

NO	NAME OF PARTS	MATERIAL	Q'TY	REMARKS	NO	NAME OF PARTS	MATERIAL	Q'TY	REMARKS
12	EM'CY BALLAST	–	1		6	LATCH	STAINLESS STEEL304	4	
11	TERMINAL BLOCK	–	1	CLAMPING 4P	5	ELECTRONIC BALLAST	–	1	
10	INSIDE EARTH BLOT	STAINLESS STEEL304	4		4	LAMP	–	2	
9	GLAND NIPPLE	NYLON	4	ø12.1~15.5	3	LAMP HOLDER	POLYCAR–BONATE	4	
8	TERMINAL BOX COVER	POLYCAR–BONATE	1		2	GLOBE	POLYCAR–BONATE	1	
7	TERMINAL BOX	POLYCAR–BONATE	1		1	BODY	STEEL	1	

APPROVED	B. K. KIM	UNIT	MM
CHECKED		SCALE	N/S
DRAWING	B. I. KIM	COLOR	N–9.3
DATE	2015.12.04	IP	56

TITLE;

FLUORESCENT CEILING LIGHT
(SURFACE TYPE, BATTERY BACKUP)
FOR MARINE USE

DAEYANG

MODEL NO.	FL220WS–0235EISWNMBbw15h12	WEIGHT	5.94 Kg
DWG NO.	L11450988	SHEET NO.	

[보안인증] 김병인 2018/08/14 17:34:42